AquaTitans

Submersible and Subsea Engineering, Support & Service

Mid-Water Sampler

AT-0160

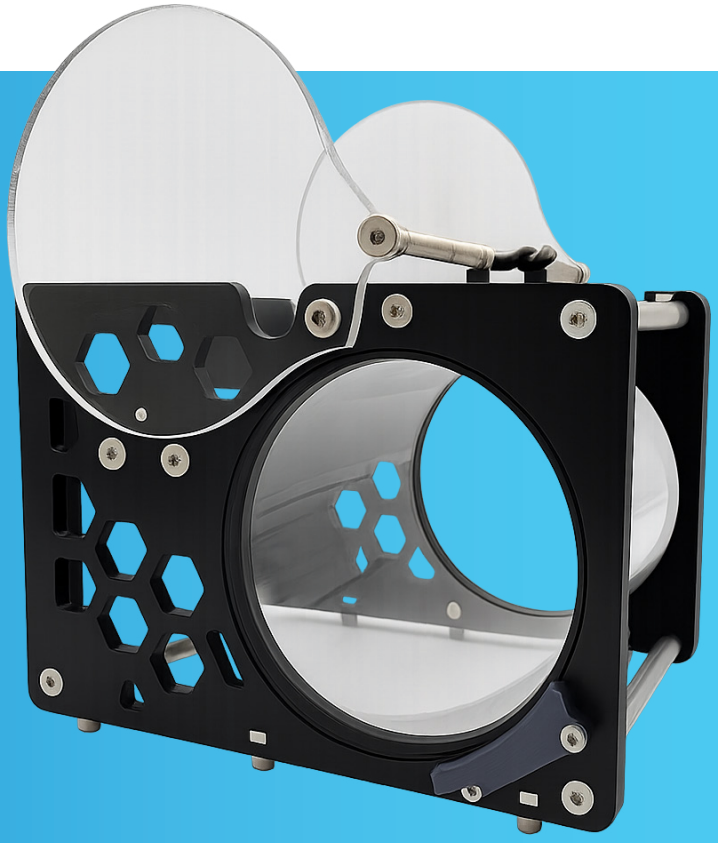

The Mid-Water Detritus Sampler (D-Sampler) allows scientists to capture delicate marine snow and plankton which are otherwise too fragile for the suction sampler.

Available with either hydraulic or electronic-actuated lids, the sample chamber carefully preserves micro-organisms with minimal disturbance to their tissues.

Key Features

- Gentle Collection – Protects fragile organisms, detritus and marine snow
- 1000 Series (hydraulic) or 2000 Series (electric)
- Pressure Relief – Built-in valves ensure safe operating limit
- Optional field-installed fine gauze net for collections across a transect

Specifications

Length	350mm
Width	292mm
Height	248mm
Collection Sample volume	7L
Weight in air	10kg
Frame Material	Delrin/Aluminium
Hydraulic Actuation	2-Way Cylinder, Open/Shut
Electrical Actuation	Spring Loaded Release Mechanism

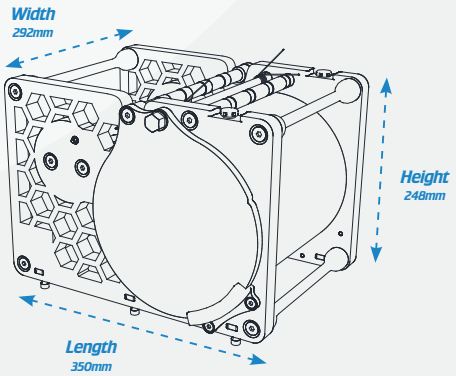

info@aquatitans.com

©2025 AquaTitans Limited. All Rights Reserved.
Registered in Scotland No: SC730487

aquatitans.com